McNeilus

HEAVY DUTY REAR LOADER



Built for reliability like our Standard model, but with more compaction to get the heavy jobs done.

Increased compaction force that can handle up to 1,000 pounds of refuse per cubic yard.

Fast pack cycle time and pack-on-the-go hydraulics keep the hopper clear and help save time, especially on routes crowded with stops.

Tough abrasion-resistant steel used in the rear loader's highest wear areas, featuring 1/4" AR200 on the hopper floor and AR450 on the sidewalls.

Most requested, productive and reliable rear loader in the industry for residential and commercial routes.

Like all McNeilus rear loaders, the Heavy Duty draws a top resale value of any similar refuse truck.

Optional McNeilus® Excalibre™ packing cylinders feature a hardened nitrided rods and a patented tool steel shaver that keep refuse debris out, reducing hydraulic contamination.

PERFORMANCE SPECIFICATIONS (in seconds)*

WORKINGRPM@IDLE	
Dump Cycle	16
Sweep Extend	4
Sweep Retract	2
Slide Extend	3
Slide Retract	7
Tailgate Open	30
Tailgate Closed	18
Compaction = 1,000 lb/yd^3	
Quick Change UHMW Polyethylene Slide Shoes	

	20 YD^3	25 YD^3	28 YD^3	32 YD^3
Ejector Extend	12 13	20 28	27	33 40
Ejector Retract			30	

*Cycle times may vary slightly

STANDARD BODY SPECIFICATIONS

Body Floor	3/16 in. AR200
Side Walls, Front Section	10-gauge AR200
Side Walls, Rear Section	1/8 in. AR450
Roof	10-gauge AR200

HOPPER SPECIFICATIONS

Hopper Capacity	3cu yd
Hopper Floor	1/4 in. AR200

PACKER/EJECTOR SPECIFICATIONS

Slide Face Plate	3/16 in. grade50high-strength steel
Sweep Face Plate	1/4 in. AR200
Packer Edge Strip	1/4 in. grade 50 high-strength steel

TAILGATE SPECIFICATIONS

Tailgate Walls	3/16 in. AR200
Wear Strips	1/2 in. x 3 in. 1044 steel
Tailgate Seal Height	50 in

OPER ATIONS

Mechanicalcontrolswith integrated control panel

H Y DR AULIC S

Pump	Single gear or vane with pack-on-the-go flow control system
Control Valves	Primary; Parker VA35 with Smar t- Pak®
Oil Reservoir	**20 yd^3:** 40 gallon **25–32 yd^3:** 50 gallon
Filter	Parker 40 CN, 100 mesh suction strainer

CYLINDERS

EjectorCylinder	20 YD^3: 7-1/4 in. bore x 5-3/4 in. rod x 88-3/4 in. stroke (3-stage) 25 YD^3: 7-1/2 in. bore x 7 in. rod x 119-1/2 in. stroke (4-stage) 28 YD^3: 7-1/2 in. bore x 7 in. rod x 138 in. stroke (4-stage) 32 YD^3: 8-3/4 in. bore x 8-1/4 in. rod x 163 in. stroke (5-stage)
Slide Cylinders	5 in. bore x 4 in. rod x 32-1/2 in. stroke
Sweep Cylinders	4-1/2 in. bore x 3-1/2 in. rod x 23 in. stroke
Tailgate Cylinders	2-7/8 in. bore x 2-1/2 in. rod x 38 in. stroke

PAINTING

Packer and components steel shot blasted prior to priming with high solids epoxy primer

Finish: PPG high-performance, high solids arcylic urethan topcoat

POPULAR OPTIONS

Spool Winch or ReevingCylinder

Guides and Latches

Container Lift Bar

McNEILUS WARRANTIES

Contact yourMcNeilus representative on warranty details.
For more information, go to www.McNeilusGarbageTrucks.com

HHE
HUGHES HEAVY EQUIPMENT

HEAVY DUTY REAR LOADER

McNeilus CNG Systems and Service offers compressed natural gas systems in a variety of configurations and capacities for the Heavy Duty Rear Loader.

McNeilus partners with top equipment dealers across North America to provide best-in-class support and access to service and parts close to home.

Proudly made in the USA.

SIDE VIEW

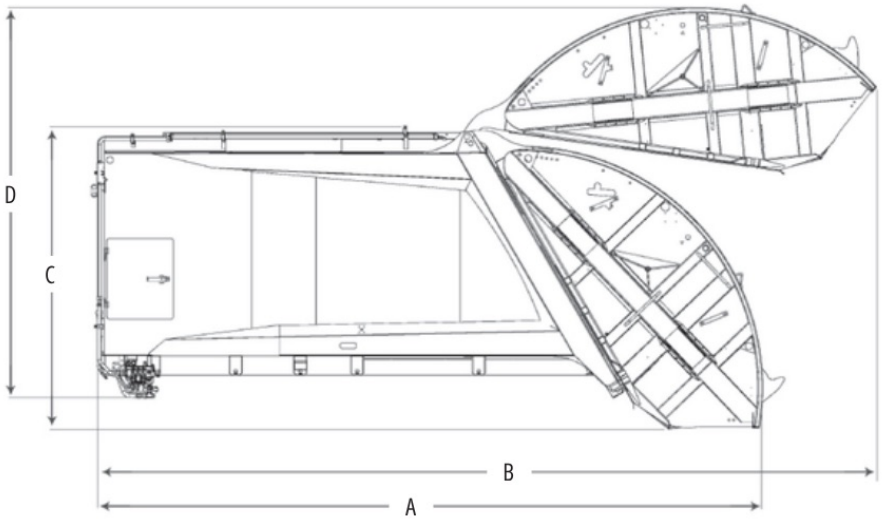

REAR VIEW

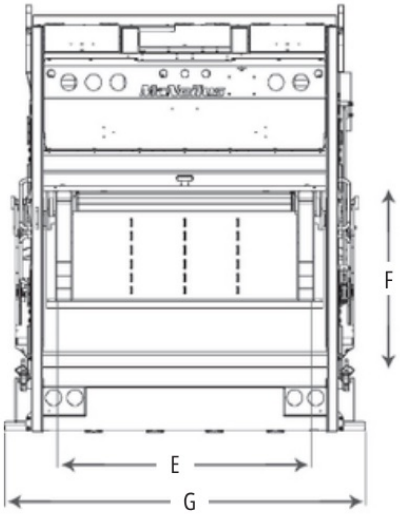

DIMENSIONS								
DESCRIPTION	20 YD³ (15.3M)³		25YD(³19.1 M³)		28 YD³ (21.4 M³)		32 YD³ (24.5 M³)	
(A) Overall Length, Tailgate Closed	246	6248 mm	278 in.	7061 mm	297 in.	7544 mm	322 in.	8179 mm
(B) Overall Length, Tailgate Raised	in.	6655 mm	294 in.	7468 mm	313 in.	7950 mm	338 in.	8585 mm
(C) Overall Height, Tailgate Closed**	262	2515 mm	99 in.	2515 mm	99 in.	2515 mm	99 in.	2515 mm
(D) Overall Height, Tailgate Raised**	in. 99	3810 mm	150 in.	3810 mm	150 in.	3810 mm	150 in.	3810 mm
(E) Inside Hopper Width	in.	2032 mm	80 in.	2032 mm	80 in.	2032 mm	80 in.	2032 mm
(F) Hopper Opening Height	150	1448 mm	57 in.	1448 mm	57 in.	1448 mm	57 in.	1448 mm
(G) Overall Width w/Steps	in. 80	2591 mm	102 in.	2591 mm	102 in.	2591 mm	102 in.	2591 mm
Overall Width w/o Steps	in. 57	2438 mm	96 in.	2438 mm	96 in.	2438 mm	96 in.	2438 mm

Note: Dimensions will change with roof/tailgate-mounted CNG options.
**Dimension with no winch. Adding a spool winch or reeving cylinder winch will increase height dimension to between 100-108 inches depending on the option chosen.

STREET SMART PARTS™

We offer a complete line of aftermarket parts and services to fit all makes and models. View and purchase at www.StreetSmartParts.com or call 888.686.7278.

Contact your local representative to learn more at www.hughesheavy.com
Learn more at www.McNeilusGarbageTrucks.com | StreetSmartParts.com

McNeilus

©2024 McNeilusTruck andManufacturing. McNeilusand the McNeilus logo, Street Smart Parts and theStreet Smart Parts logo are trademarks of McNeilus Truck and Manufacturing, Dodge Center, MN, USA. All other designated trademarks are the property of their respective owners. Specifications, descriptions and illustrations in this brochure are accurate as shown at the time of publication, but are subject to change without notice. Illustrations may include optional equipment and accessories and may not include all standard equipment.