McNeilus

STANDARD REAR LOADER



The top workhorse in the industry. Reliable performance. Low maintenance. It's the go-to refuse vehicle.

The most requested, productive and reliable rear loader in the industry for residential and light commercial routes.

Maximizes efficiency with a 16- to 18-second pack cycle time that keeps the hopper clear, saving time on densely populated routes.

Top-quality abrasion-resistant steel featured in the rear loader's highest-wear area—the hopper and rear of the body.

Built to simplify maintenance with fewer service points and cycle times that help boost productivity, increasing your efficiency.

Options to accommodate domestic and international refuse collection.

The highest resale value of any similar refuse truck on the market.

Optional McNeilus® Excalibre™ packing cylinders feature a hardened nitrided rods and a patented tool steel shaver that keep refuse debris out, reducing hydraulic contamination.

PERFORMANCE SPECIFICATIONS (in seconds)*

WORKINGRPM@IDLE	
Dump Cycle	16
Sweep Extend	4
Sweep Retract	2
Slide Extend	3
Slide Retract	7
Tailgate Open	30
Tailgate Closed	18

Compaction = 900 lb/yd^3

Quick Change UHMW polyethylene slide shoes

	17	20	25 YD^3	28	32 YD^3
Ejector Extend	YD^{3}10	YD^{3}12	20	YD^{3}27	33
Ejector Retract	11	13	28	30	40

*Cycle times may vary slightly

STANDARD BODY SPECIFICATIONS

Body Floor	3/16 in. AR200
Side Walls, Front Section	10-gauge AR200
Side Walls, Rear Section	1/8 in. AR450
Roof	10-gauge AR200

HOPPER SPECIFICATIONS

Hopper Capacity	3cu yd
Hopper Floor	3/16 in. AR200 (standard) 1/4 in. AR200 (optional)

PACKER/EJECTOR SPECIFICATIONS

Slide Face Plate	3/16 in. grade50high-strength steel
Sweep Face Plate	1/4 in. AR200
Packer Edge Strip	1/4 in. grade 50 high-strength steel

TAILGATE SPECIFICATIONS

Tailgate Walls	3/16 in. AR200
Wear Strips	1/2 in. x 3 in. 1044 steel
Tailgate Seal Height	50 in.

OPER ATIONS

Mechanicalcontrolswith integrated control panel

H Y DR AULIC S

Pump	Single gear or vane with pack-on-the-go flow control system
Control Valves	Primary; Parker VA35 with Smar t- Pak®
Oil Reservoir	**17–20 yd^3:** 40 gallon **25–32 yd^3:** 50 gallon
Filter	Parker 40 CN, 100 mesh suction strainer

CYLINDERS

EjectorCylinder	6-1/4 in. bore x 5-3/4 in. rod x 88-3/4 in. stroke (20 yd, 3-stage) 7-1/2 in. bore x 7 in. rod x 119-1/2 in. stroke (25 yd, 4-stage)
Slide Cylinder	4-1/2 in. bore x 3-1/2 in. rod x 32-1/2 in. stroke
Sweep Cylinders	4 in. bore x 3 in. rod
Tailgate Cylinder	2-7/8 in. bore x 2-1/2 in. rod x 32-1/2 in. stroke

PAINTING

Packer and components steel shot blasted prior to priming with high solids epoxy primer

Finish: PPG high-performance, high solids acrylic urethane topcoat

POPULAR OPTIONS

Spool Winch or ReevingCylinder

Guides and Latches

Container Lift Bar

McNEILUS WARRANTIES

Contact yourMcNeilus representative on warranty details.
For more information, go to www.McNeilusGarbageTrucks.com

HHE
HUGHES HEAVY EQUIPMENT

STANDARD REAR LOADER

McNeilus CNG Systems and Service offers compressed natural gas systems in a variety of configurations and capacities for the Standard Rear Loader.

McNeilus partners with top equipment dealers across North America to provide best-in-class support and access to service and parts close to home.

Proudly made in the USA.

SIDE VIEW

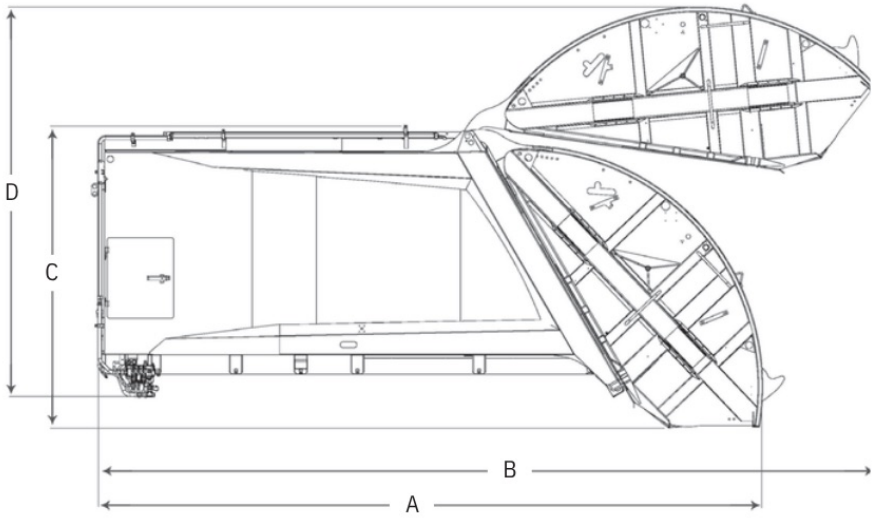

REAR VIEW

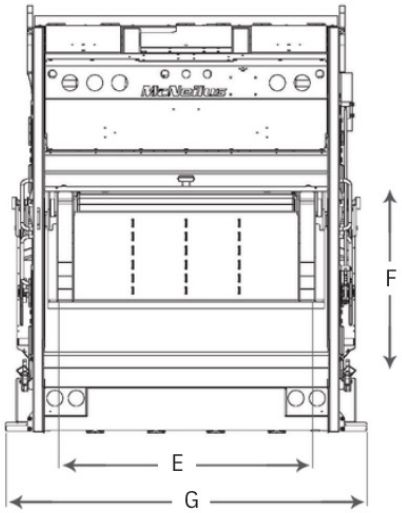

DIMENSIONS								
DESCRIPTION	20 YD³ (15.3M³)		25YD³(19.1 M³)		28 YD³ (21.4 M³)		32 YD³ (24.5 M³)	
(A) Overall Length, Tailgate Closed	246 in.	6248 mm	278 in.	7061 mm	297 in.	7544 mm	322 in.	8179 mm
(B) Overall Length, Tailgate Raised	262 in.	6655 mm	294 in.	7468 mm	313 in.	7950 mm	338 in.	8585 mm
(C) Overall Height, Tailgate Closed**	99 in.	2515 mm	99 in.	2515 mm	99 in.	2515 mm	99 in.	2515 mm
(D) Overall Height, Tailgate Raised**	150 in.	3810 mm	150 in.	3810 mm	150 in.	3810 mm	150 in.	3810 mm
(E) Inside Hopper Width	80 in.	2032 mm	80 in.	2032 mm	80 in.	2032 mm	80 in.	2032 mm
(F) Hopper Opening Height	57 in.	1448 mm	57 in.	1448 mm	57 in.	1448 mm	57 in.	1448 mm
(G) Overall Width w/Steps	102 in.	2591 mm	102 in.	2591 mm	102 in.	2591 mm	102 in.	2591 mm
Overall Width w/o Steps	96 in.	2438 mm	96 in.	2438 mm	96 in.	2438 mm	96 in.	2438 mm

Note: Dimensions will change with roof/tailgate-mounted CNG options.

**Dimension with no winch. Adding a spool winch or reeving cylinder winch will increase height dimension to between 100-108 inches depending on the option chosen.

STREET SMART PARTS

We offer a complete line of aftermarket parts and services to fit all makes and models. View and purchase at www.StreetSmartParts.com or call 888.686.7278.

Contact your local representative to learn more at www.hughesheavy.com

Learn more at www.McNeilusGarbageTrucks.com | StreetSmartParts.com

©2024 McNeilusTruck andManufacturing. McNeilusand the McNeilus logo, Street Smart Parts and theSteet Smart Parts logo are trademarks of McNeilus Truck and Manufacturing, Dodge Center, MN, USA. All other designated trademarks are the property of their respective owners. Specifications, descriptions and illustrations in this brochure are accurate as shown at the time of publication, but are subject to change without notice. Illustrations may include optional equipment and accessories and may not include all standard equipment.