McNeilus

XC/XXC REAR LOADER



Powerful rear loader with more capacity and more compaction to take on the toughest routes.

Increased compaction force that can handle up to 1,200 pounds of refuse per cubic yard.

Larger tailgate and hopper allow for more volume from residential to heavy commercial routes.

Fast pack cycle time and pack-on-the-go hydraulics keep the hopper clear and help operators save time, especially on routes crowded with stops.

Tough abrasion resistant steel used in the rear loader's highest wear areas, featuring 1/4" AR200 on the hopper floor and AR450 used in the body sidewalls.

Like all McNeilus rear loaders, the XC commands a top resale value of any similar truck on the market.

Optional McNeilus® Excalibre™ cylinders feature a hardened tool steel scraper that drastically reduces hydraulic contamination.

XXC package available for even more demanding routes that includes a thicker body floor, reinforced load edge, splash guard and extended tailgate seal.

PERFORMANCE SPECIFICATIONS (in seconds)*

WORKINGRPM@IDLE	
Dump Cycle	25 -27
Sweep Extend	7
Sweep Retract	4
Slide Extend	5
Slide Retract	11
Tailgate Open	30
Tailgate Closed	18
Compaction = 1,200 lb/yd	
Quick Change UHMW Polyethylene Slide Shoes	

	25 YD^3	28 YD^3	32 YD^3
Ejector Extend	20 28	27	33 40
Ejector Retract		30	

*Cycle times may vary slightly

STANDARD BODY SPECIFICATIONS

Body Floor	3/16 in. AR200 5/16 in. AR200 (XXC)
Side Walls, Front Section	10-gauge AR200
Side Walls, Rear Section	1/8 in. AR450
Roof	10-gauge AR200

HOPPER SPECIFICATIONS

Hopper Capacity	3.5 cu yd
Hopper Floor	1/4 in. AR200
Hopper Sides	Top: 3/16 in. grade 50 high-strength steel, Bottom: 1/4 in. AR200
Hopper Liner	1/4 in. AR200

PACKER/EJECTOR SPECIFICATIONS

Slide Face Plate	3/16 in. grade50high-strength steel
Sweep Face Plate	1/4 in. AR200
Packer Edge Strip	1/4 in. grade 50 high-strength steel

TAILGATE SPECIFICATIONS

Tailgate Walls	3/16 in. AR200
Wear Strips	1/2 in. x 3 in. 1044 steel
Tailgate Seal Height	50 in

OPER ATIONS

Mechanicalcontrolswith integrated control panel

H Y DR AULIC S

Pump	Single gear or vane with pack-on-the-go flow control system
Control Valves	Primary; Parker VA35 with Smart-Pak®
Oil Reservoir	20 yd^3: 40 gallon 25–32 yd^3: 50 gallon
Filter	Parker 40 CN, 100 mesh suction strainer

CYLINDERS

EjectorCylinder	25 YD^3: 7-1/2 in. bore x 7 in. rod x 119-1/2 in. stroke (4-stage) 28 YD^3: 7-1/2 in. bore x 7 in. rod x 138 in. stroke (4-stage) 32 YD^3: 8-3/4 in. bore x 8-1/4 in. rod x 163 in. stroke (5-stage)
Slide Cylinder	5-1/2 in. bore x 4-1/2 in. rod x 39 in. stroke
Sweep Cylinders	5 in. bore x 4 in. rod
Tailgate Cylinder	3-1/2 in. bore x 3 in. rod x 42 in. stroke

PAINTING

Packer and components steel shot blasted prior to priming with high solids epoxy primer

Finish: PPG high-performance, highh solids acrylic urethane topcoat

POPULAR OPTIONS

Spool Winch or ReevingCylinder

Guides and Latches

Container Lift Bar

McNEILUS WARRANTIES

Contact yourMcNeilus representative on warranty details.
For more information, go to www.McNeilusGarbageTrucks.com

HHE
HUGHES HEAVY EQUIPMENT

XC/XXC REAR LOADER

McNeilus CNG Systems and Service offers compressed natural gas systems in a variety of configurations and capacities for the Extra Compaction Rear Loader.

McNeilus partners with top equipment dealers across North America to provide best-in-class support and access to service and parts close to home.

Proudly made in the USA.

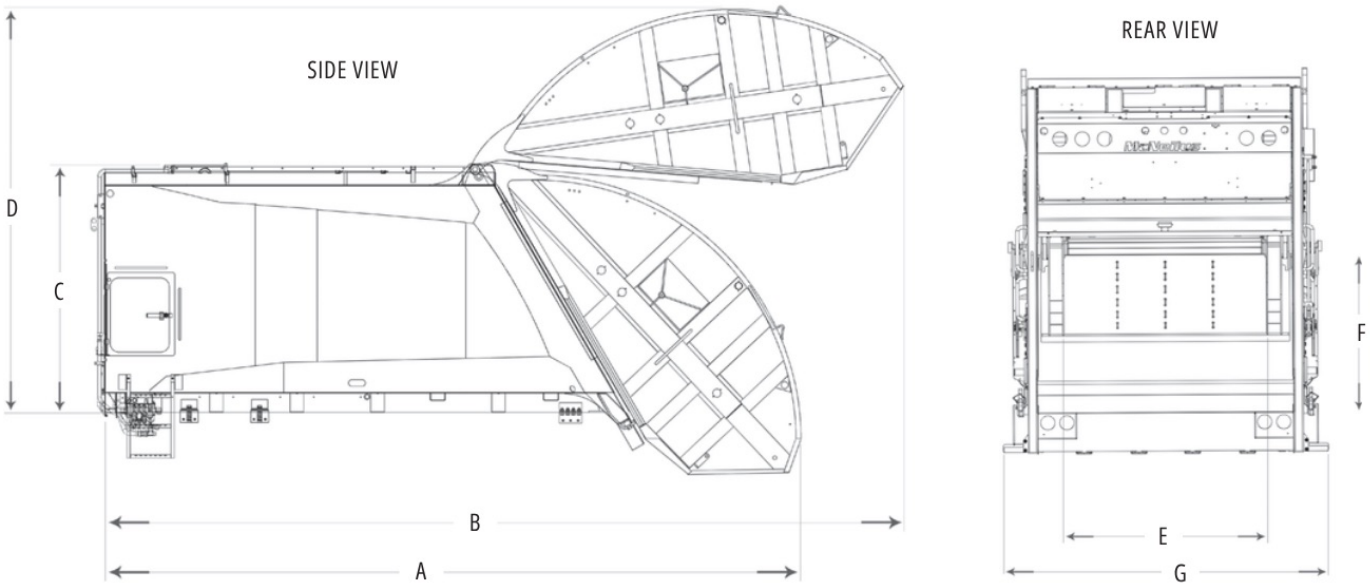

DIMENSIONS						
DESCRIPTION	25YD³ (19.1M³)		28 YD³ (21.4 M³)		32 YD³ (24.5 M³)	
(A) Overall Length, Tailgate Closed	285 in.	7239 mm	304 in.	7722 mm	329 in.	8357 mm
(B) Overall Length, Tailgate Raised	314 in.	7976 mm	333 in.	8458 mm	358 in.	9093 mm
(C) Overall Height, Tailgate Closed**	99 in.	2515 mm	99 in.	2515 mm	99 in.	2515 mm
(D) Overall Height, Tailgate Raised**	170 in.	4318 mm	170 in.	4318 mm	170 in.	4318 mm
(E) Inside Hopper Width	80 in.	2032 mm	80 in.	2032 mm	80 in.	2032 mm
(F) Hopper Opening Height	58 in.	1473 mm	58 in.	1473 mm	58 in.	1473 mm
(G) Overall Width w/Steps	102 in.	2591 mm	102 in.	2591 mm	102 in.	2591 mm
Overall Width w/o Steps	96 in.	2438 mm	96 in.	2438 mm	96 in.	2438 mm

Note: Dimensions will change with roof/tailgate-mounted CNG options.

**Dimension with no winch. Adding a spool winch or reeving cylinder winch will increase height dimension to between 100-108 inches depending on the option chosen.

STREET SMART PARTS

We offer a complete line of aftermarket parts and services to fit all makes and models. View and purchase at www.StreetSmartParts.com or call 888.686.7278.

Contact your local representative to learn more at www.hughesheavy.com

Learn more at www.McNeilusGarbageTrucks.com | StreetSmartParts.com

©2025 McNeilusTruck andManufacturing. McNeilusand the McNeilus logo, Street Smart Parts and theStreet Smart Parts logo are trademarks of McNeilus Truck and Manufacturing, Dodge Center, MN, USA. All other designated trademarks are the property of their respective owners. Specifications, descriptions and illustrations in this brochure are accurate as shown at the time of publication, but are subject to change without notice. Illustrations may include optional equipment and accessories and may not include all standard equipment.